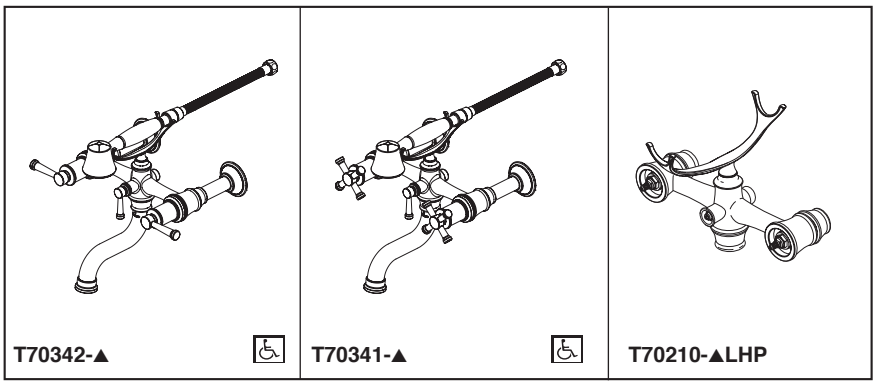

Submitted Model No.:_____

Specific Features:_____

Wall Mount Configuration

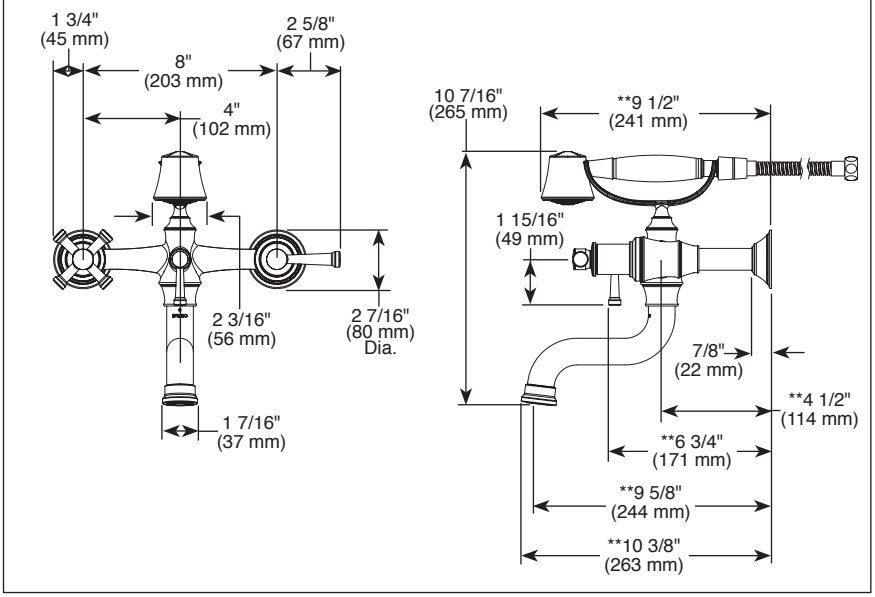

Deck Mount Configuration

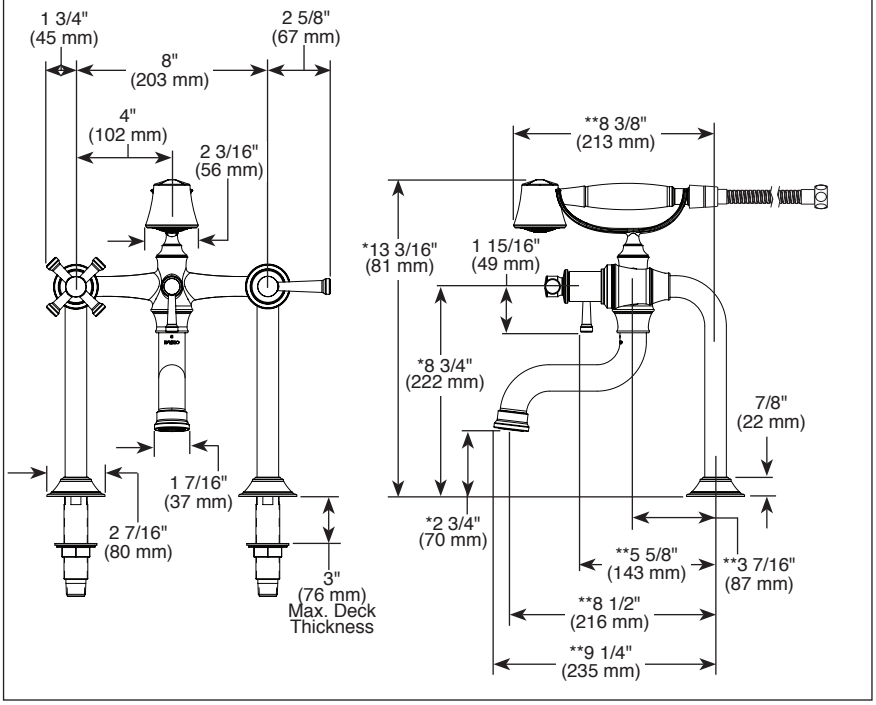

▲ Designate Proper Finish Suffix

Brizo Kitchen & Bath Company reserves the right (1) to make changes in specifications and materials, and (2) to change or discontinue models, both without notice or obligation. Dimensions are for reference only. See current full-line price book or www.brizo.com for finish options and product availability.

BSP-B-T70342 Rev. C

BRIZO®

TWO HANDLE WALL, DECK, AND FLOOR MOUNT TUB FILLER

- Atavis™ Collection
- Wall, Deck or Floor Mount

STANDARD SPECIFICATIONS:

- Solid brass construction
- Rotating handshower cradle rotates 90˚ in either direction
- 60"-82" stretchable finished metal hose
- High flow ceramic control valves
- Available in lever or cross handles
- Certified dual check valves in handshower, 1.75 gpm @ 80 psi, 6.6 L/min @ 550 kPa
- Spout flow up to 12 gpm @ 60 psi, 45.4 L/min @ 410 kPa
- Bi-directional diverter
- Dual column design or 8" center-to-center
- Drain not included
- Insulated floor and deck risers to control surface condensation and heat
- Requires mounting hardware:
  - RP73764▲ wall mount unions
  - RP73765▲ deck mount risers
  - RP73766▲ floor mount risers
- Floor mount configuration requires rough-in to complete installation:
  - R70200-WS with integrated stops
  - R70200 without stops, provides maximum flow
- *Optional riser extension set (RP73767▲) provides 2" of additional spout height for deck or floor mount configurations
- **Optional spout reach extension set (RP80157▲) provides 2" of additional spout reach for wall, deck, and floor mount configuration

WARRANTY

- Parts and Finish - Lifetime limited warranty; or for commercial purchasers, 10 years for multi-family residential (apartments and condominiums) and 5 years for all other commercial uses, in each case from the date of purchase.
- Electronic Parts and Batteries (if applicable) - 5 years from the date of purchase; or for commercial purchasers, 1 year from the date of purchase. No warranty is provided on batteries.

WARNING: Risk of personal injury. Do not use the tub filler as a grab bar or support bar. Install this product according to the installation guide.

WaterSense Meets EPA Criteria
Certified by CSA Group
HAND SHOWER
DOUCHE À MAIN
REGADERA DE MANO

COMPLIES WITH:

- ASME A112.18.1 / CSA B125.1
- Indicates compliance to ICC/ANSI A117.1 - Valve control only
- EPA WaterSense - Applies to T70341▲ and T70342▲ only

Brizo Kitchen & Bath Company
55 E. 111th Street, Indianapolis, Indiana 46280
350 South Edgeware Road, St. Thomas, ON N5P 4L1
© 2019 Brizo Kitchen & Bath Company
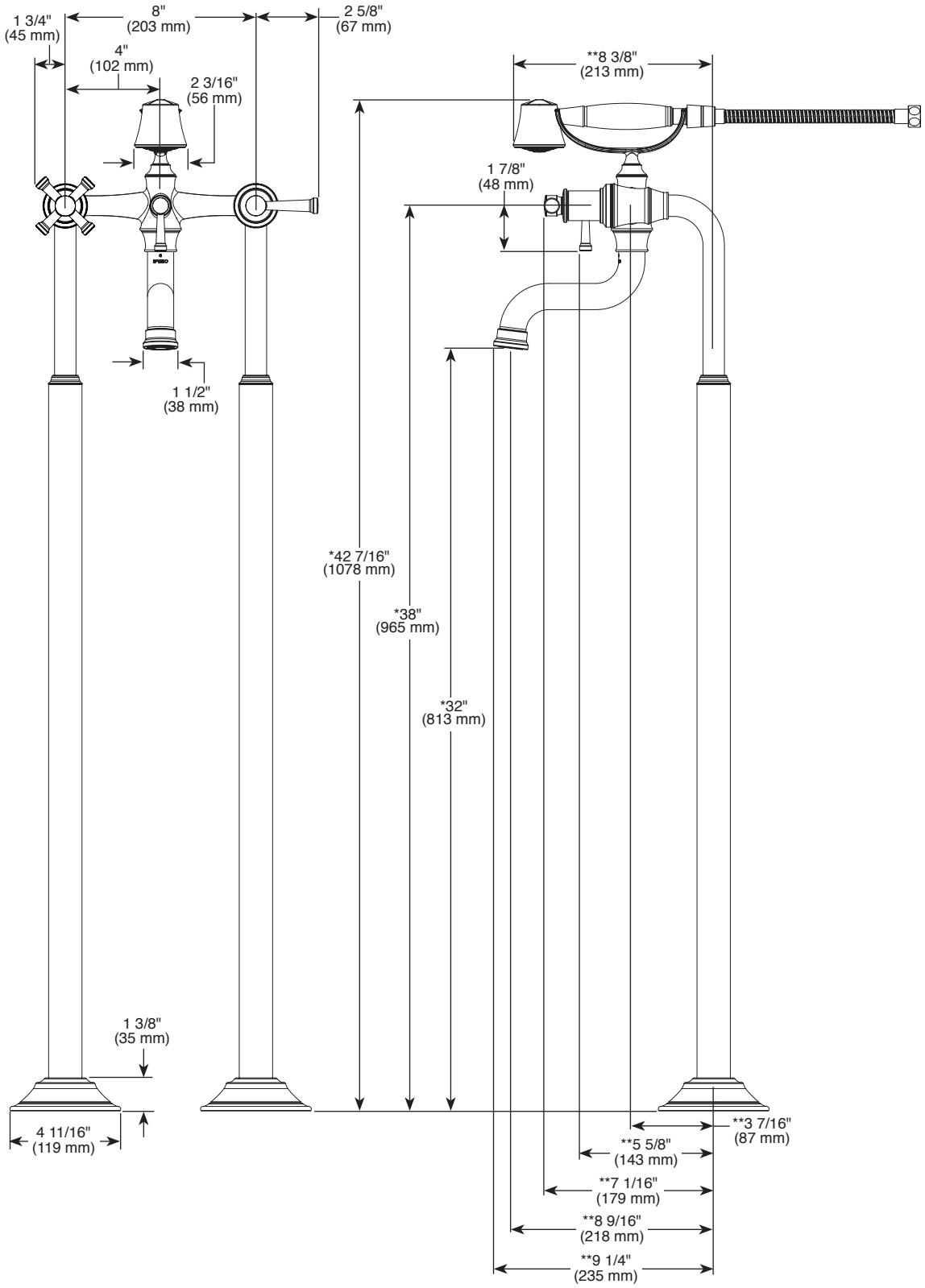
Floor Mount Configuration